PAD CLEARANCES
Front – 7.5' Minimum
Sides – 3' Minimum
Back – 3' Minimum
Overhead – No obstructions permitted

3000 PSI concrete pad (15" thick), on undisturbed or well compacted earth. A cure time of 7 days required before transformer is set.

4000 PSI concrete may be used to reduce cure time. Documentation is required!

Supplied and installed by the customer:
1/0 bare copper wire (minimum of 75' required)
5/8" x 8' copper ground rod (2 required)
5/8" to 1/0 Shearlock (3 required)
1/0 to 1/0 cable connector (2 required)

Please refer to CORED Standard 514 for additional options and grounding details.

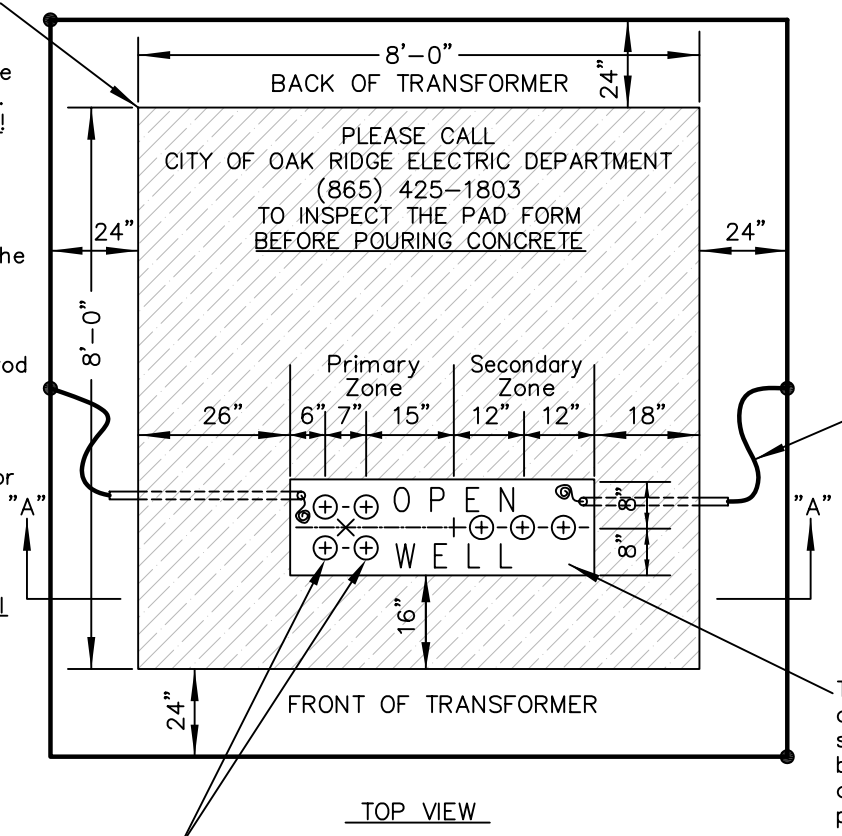

TOP VIEW

The ends of the ground wire loop shall be brought up in 1" pvc conduit so as not to make contact with the concrete. One loop in the Primary side, and one in the Secondary side. Leave minimum 5' excess wire.

This represents the service conduit entrance area. All service conduit bends must be confined within this area and as near the center as practical. This area is meant to be an opening in the pad. Spare conduits are strongly recommended.

Typically four 2.5" schedule 40 pvc conduit, 90° bends, 36" sweep.

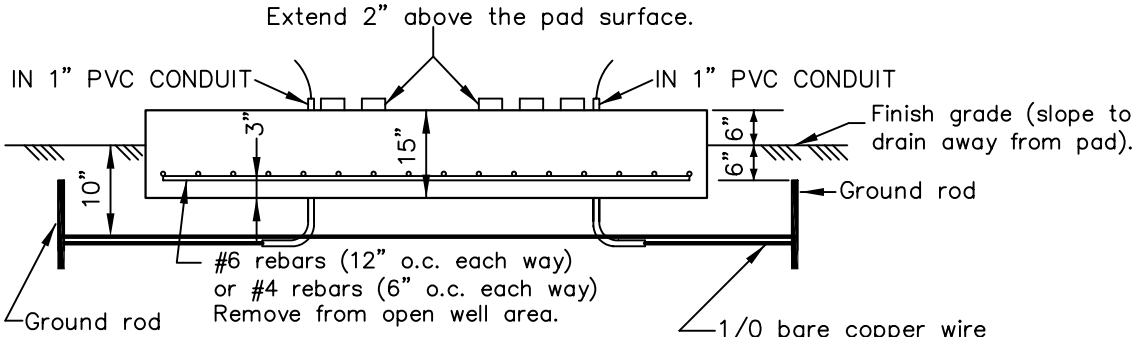

SECTION "A–A" VIEW

NOTES:
Pad location shall be acceptable to City Of Oak Ridge Electric Department (CORED), and shall be a minimum of 25' from flammable buildings, doors, etc. Otherwise, a protective wall shall be built by the customer around the transformer pad per CORED Standard 330. If pad location is vulnerable to vehicular traffic, guard posts shall be installed by customer per CORED Standard 660. CORED will own, install, and terminate primary cable. Customer will own and install service cable, which will be terminated at pad mounted transformer by CORED. No other utilities are permitted under, or within, a minimum of 3 feet of the pad. If pulse metering is required, it shall be stubbed up outside of the pad, on the secondary side, with a 3/4 inch opening to the control box.

Standard Pad Mounted Transformer (Foundation Details For All 3 Phase Services)

REV	DATE	DRWN	APPD	DESCRIPTION	SUPERSEDES: 478.S01.R04		SCALE: NTS
3	1–01–10	PWS	MEB	HANDBOOK UPDATE.	DRWN: PWS	APPD: MEBeams	DATE: 7–31–07
2	7–31–09	PWS	MEB	Changed layout, and note for installing pigtails in conduit.	CORED STANDARD NUMBER 710 R 3		